REV.	NOTES	DATE
A	RELEASED	2018/05/11

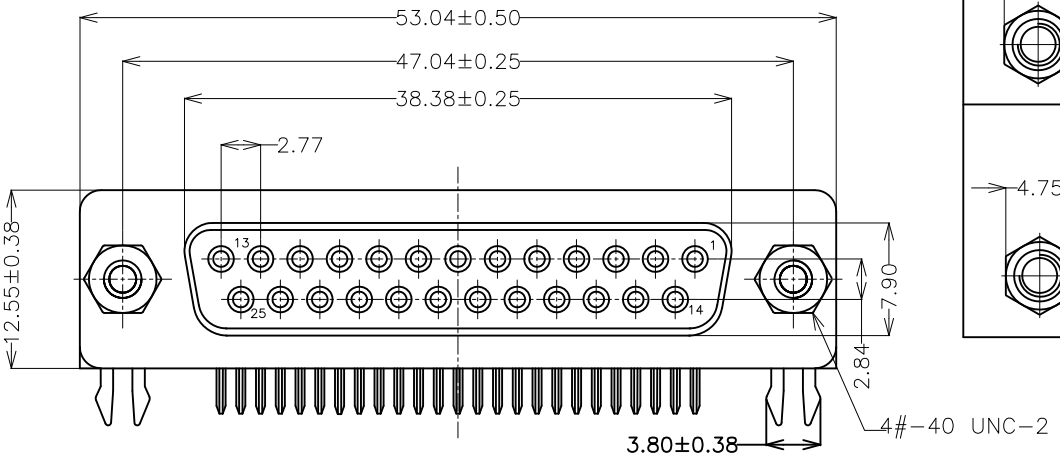

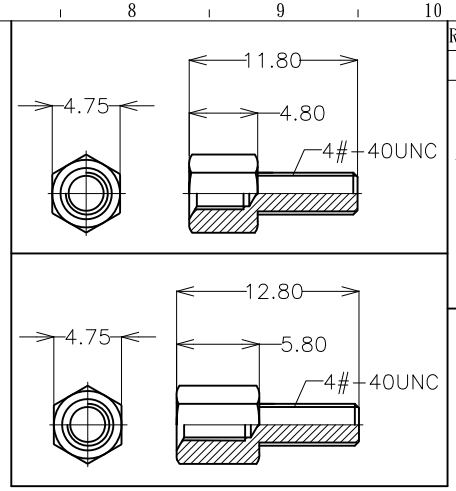

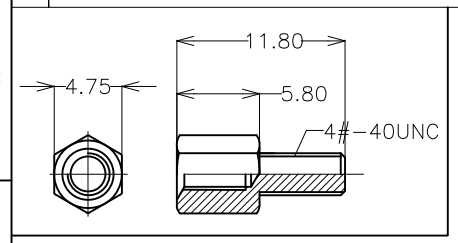

NOTES:
1.MATERIAL
1.1 INSULATOR:PBT+30%GF
1.2 CONTACT:BRASS
1.3 CONTACT PLATING:GOLD/TIN PLATED
1.4 SHELL:SPCC, NICKEL PLATED
1.5 SCREW:BRASS,NICKEL PLATED

2.SPECIFICATION
2.1 CURRENT RATE:5AMPS
2.2 INSULATOR RESISTANCE:1000MΩ MIN,AT 500V DC
2.3 DIELECTRIC STRENGTH:1000V PER MINUTE
2.4 OPERATION TEMPERATURE:-55°C TO +105°C

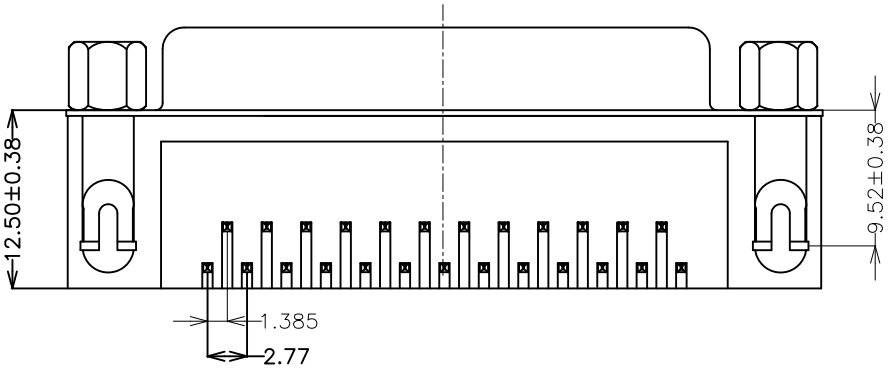

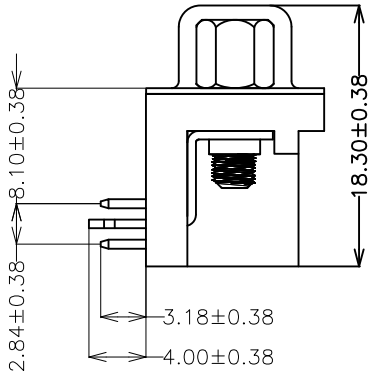

Color description

PART NO.	COLOR
AA02+250X-2080	BLACK
AA02+250X-2280	Grape red 葡萄紅

To prepare:

PART NO.	RIVETING STRUCTUER	SCREW	CONTACT PLATING
AA02+2501-2X80	鉚合不附螺絲		GOLD/TIN PLATED
AA02+2502-2X80	鉚合鎖螺絲	4.8*11.8	GOLD/TIN PLATED
AA02+2503-2X80	叉鎖鎖螺絲	4.8*11.8	GOLD/TIN PLATED
AA02+2504-2X80	鉚合附螺絲	4.8*11.8	GOLD/TIN PLATED
AA02+2505-2X80	鉚合附螺絲	5.8*12.8	GOLD/TIN PLATED
AA02+2506-2X80	鉚合鎖螺絲	5.8*12.8	GOLD/TIN PLATED
AA02+2507-2X80	鉚合附螺絲	5.8*11.8	GOLD/TIN PLATED
AA02+2508-2X80	鉚合鎖螺絲	5.8*11.8	GOLD/TIN PLATED

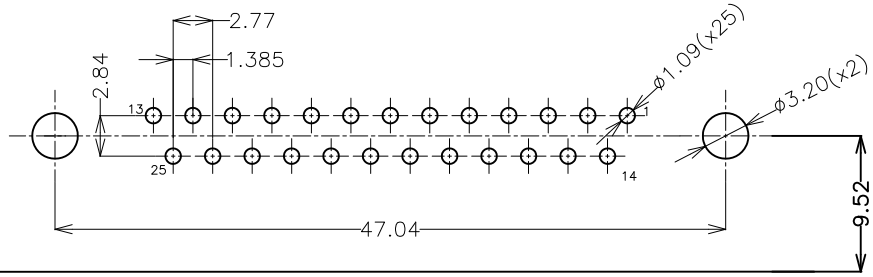

P.C.B. LAYOUT(TORANCE±0.05)

TOP VIEW

DIMENSIONS TOLERANCE

METRIC
.0= ±.38
.00= ±.25
.000=±.15
.0000=±.
ANG.=±2°

單位(UNITS)	mm
數量(QT'Y)	N/A
材料(MT'L)	SEE NOTE
處理(FINISH)	SEE NOTE
繪圖(DRAW)	
設計(DE'N)	
審校(CH'K)	
核准(APP'D)	

東莞翊豐精密五金有限公司

圖名(NAME)

D-USB 25P母 8.1 系列 RoHS

料號(PART NUMBER)	AA02+250X-2X80
圖號(DRAW NUMBER)	
圖檔(FILE NAME .DWG)	

比例 (SCALE)	1/1	圖紙 (SIZE)	A4	頁次 (SHEET)	1/2	版次 (REV.)	A