REV.	NOTES	DATE
A	RELEASED	2017/09/25

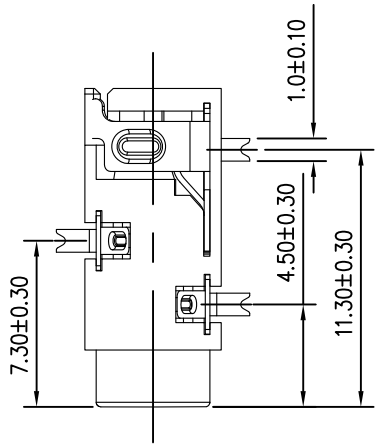

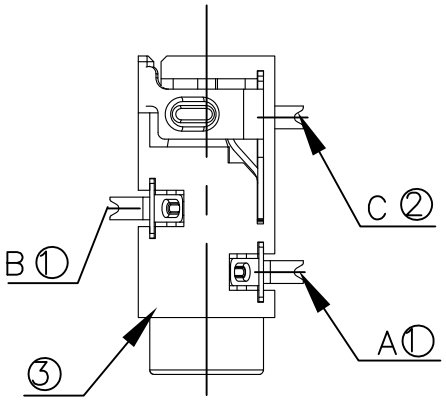

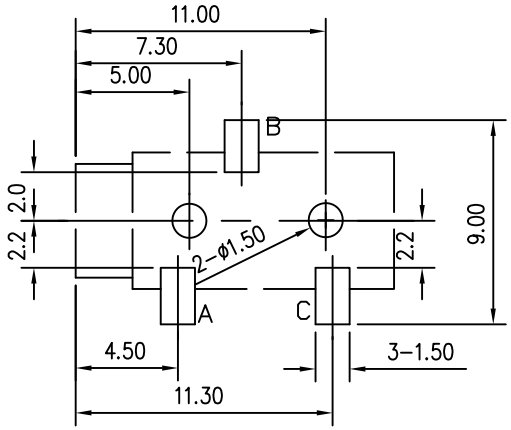

PCB LAYOUT TOP VIEW

NOTE:
1.Material
1.1 TERMINAL 1#: C5191 t=0.20
1.2 TERMINAL 2#3#: C5191 t=0.25
1.5 Housing: PA9T+30%G/F, Black
2.Plating
2.1 Terminal 1#&2#&3#: 1u"MIN.Ag In Contact
Over 50u" MIN. Ni.

SPECIFICATIONS:
1. ELECTRICAL CHARACTERISTICS:
1-1. RATING:
1-2. CONTACT RESISTANCE: 30mΩ MAX.(INITIAL)
1-3. DIELECTRIC WITHSTANDING VOLTAGE: 500V AC FOR ONE MINUTE
1-4. INSULATION RESISTANCE: 100MΩMIN. MEASURED BY 500V DC
2. MECHANICAL CHARACTERISTICS:
2-1. INSERTION FORCE : 0.3~3.0 KGF
2-2. WITHDRAWAL FORCE : 0.3~3.0 KGF
3. LIFE TEST: 5,000 CYCLES MIN.
4. FOR REFLOW SOLDERING LEAD-FREE PROCESS.

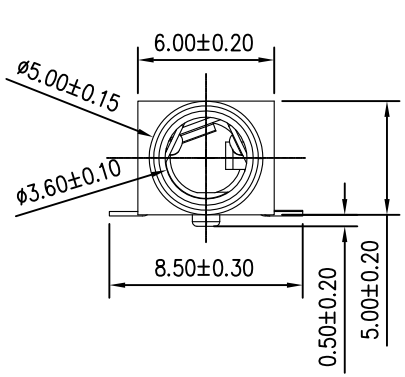

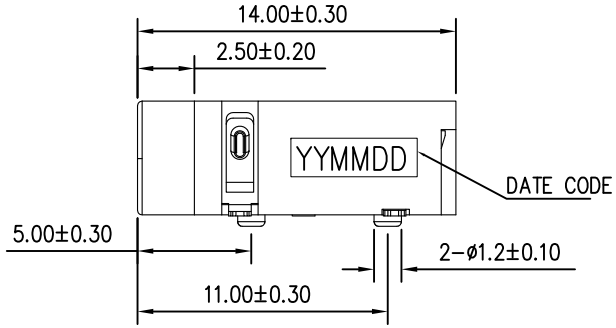

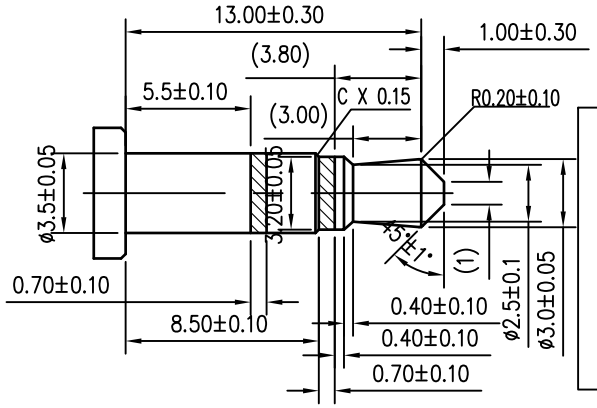

PLUG SPEC

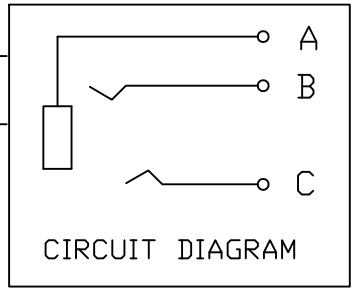

CIRCUIT DIAGRAM

YYMMDD
DD：DAY 日
MM：MONTH 月
YY：YEAR 年

NO.	DESCRIPTION	QTY	MATERIAL	PLATING & COLOR
③	HOUSING	1	PA-9T	Black
②	TERMINAL	1	C5191 t=0.25	Ag-Plated
①	TERMINAL	2	C5191 t=0.20	Ag-Plated

DIMENSIONS
TOLERANCE
METRIC
X :±0.5
X.X :±0.30
X.XX :±0.20
ANGLES
X :±1°
X.X :±0.5°

單位(UNITS)	mm	東莞翊豐精密五金有限公司	
數量(QT'Y)	N/A		
材料(MT'L)	SEE NOTE		
處理(FINISH)	SEE NOTE	圖名(NAME)	Φ3.5 PHONE JACK SMT 有定位柱
繪圖(DRAW)			
設計(DE'N)		料號(PART NUMBER)	AAPJ+JK03P-3539
審校(CH'K)		圖號(DRAW NUMBER)	
		圖檔(FILE NAME .DWG)	
核准(APP'D)		比例(SCALE) 1/1 圖紙(SIZE) A4 頁次(SHEET) 1 版次(REV.) A	