REV.	NOTES	DATE
A	RELEASED	2022/09/18

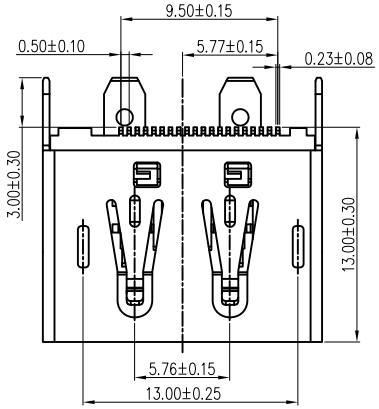

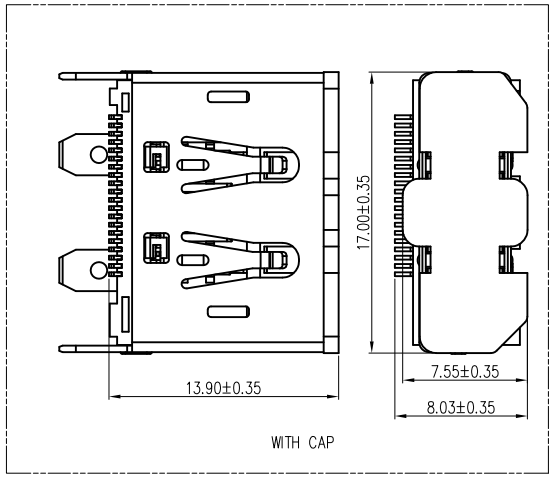

NOTE:

1.Material
- 1.1 HOUSING: LCP, UL 94V-0;COLOR: BLACK.
- 1.2 CONTACT: C2680, T=0.20mm.
- 1.3 SHIELD: S50C, T=0.40mm.
- 1.4 CAP: LCP,UL 94V-0

2.Plating
- 2.1 Terminal:GOLD(15U") PLATING IN CONTACT AREA, 50u"MIN Tin PLATED IN SOLDER AREA, 30u" MIN. NICKEL UNDERPLATED OVERALL.
- 2.2 Shell:CU 50u"+NI50u"PLATED

3.Electrical
- 3.1 Current rating: 0.5A
- 3.2 Rated Voltage: 40V MAX
- 3.3 TEMPERATURE: -20℃ TO +65℃
- 3.4 Contact Resistance: 40mΩ
- 3.5 Insulation Resistance: 100MΩ MIN
- 3.6 Dielectric Withstanding Voltage: apply 500VDC for 1 minute between adjacent terminal or ground.
- 3.7 Insertion Force: 45N MAX
  Withdrawal Force: 8N MIN
- 3.8 Durability: 5000 cycles ;

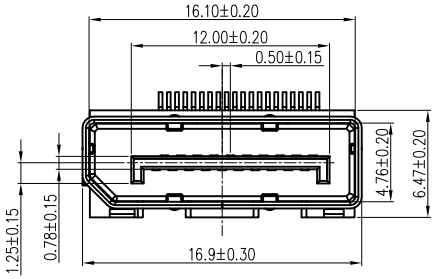

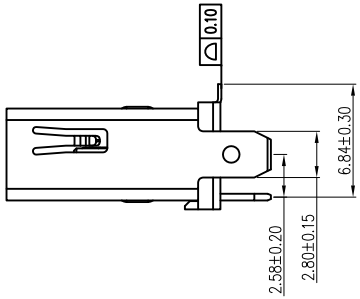

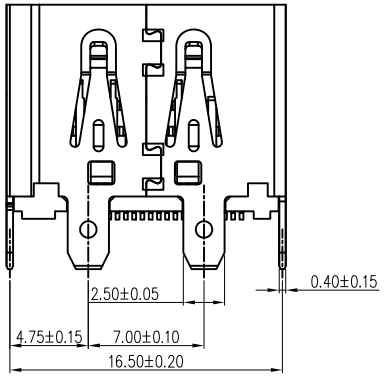

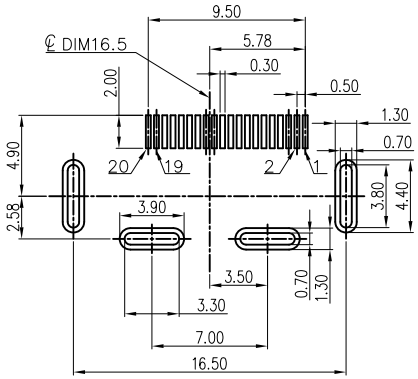

RECOMMEND P.C.B. LAYOUT(TOP VIEW)

(P.C.B THICKNESS=1.60mm)

NO.	PART NAME	MATERIAL	DESCRIPTION
4	CAP	LCP	BLACK UL94V-0
3	SHIELD	S50C	CU 50u"+NI50u"PLATED
2	CONTACT	C2680	GOLD(15U") PLATING IN CONTACT AREA,50u"MIN Tin PLATED IN SOLDER AREA, 30u" MIN. NICKEL UNDERPLATED OVERALL.
1	HOUSING	LCP	BLACK UL94V-0

DIMENSIONS
TOLERANCE
METRIC

X :±0.3
X.X :±0.2
X.XX :±0.1
X.XXX :±0.05
ANGLES
X :±1°
X.X :±0.5°

單位(UNITS)		東莞翊豐精密五金有限公司	
數量(QT'Y)	N/A		
材料(MT'L)	SEE NOTE		
處理(FINISH)	SEE NOTE	圖名(NAME)	DP A TYPE 180度SMT无卷边H=13mm ROHS
繪圖(DRAW)			
設計(DE'N)		料號(PART NUMBER)	AADP+DP03C-LBA4M
審校(CH'K)		圖號(DRAW NUMBER)	
		圖檔(FILE NAME .DWG)	
核准(APP'D)		比例(SCALE) 1/1	圖紙(SIZE) A4 / 頁次(SHEET) 1/1 / 版次(REV.) A